CS-2700 High Speed Compensating Stacker

The **CS-2700** Compensating Stacker is designed for general pressroom, print finishing, or converting applications where speed, reliability, high stack quality and versatility are required. It can work directly inline with press deliveries, rotary trimmers, or feeders at a maximum rate of 100K PPH. High quality stacks of products are counted, compressed, compensated, and then delivered onto a belt-driven air table for further manual or automated processing. Many features designed into the standard model, make it easily adaptable to many different operating conditions.

Features:

- Independently-driven waste divert conveyor assures clean transfer of waste
- Calibrated numerical readouts on upper bin and pneumatic crush roller settings
- Interfaces with delivery streams from 18"- 56" (457-1422mm) without extra conveyors
- High-frequency stream alignment and jogging
- Reliable and accurate laser counting as standard
- High frequency jogging in the stacking bucket on all sides
- Automatic lifting of upper belts for quick and easy jam clearance
- Quick lock swivel casters for easy movement in any direction
- Improved control for lightweight signatures
- Operator controls on all four sides of the stacker
- Self-supported air delivery table with auto detection can be moved by one operator.
- On board clock logs operating hours and drives maintenance schedule reminders
- High visibility touch screen with easy access, easy-to-understand operator controls, maintenance menus and troubleshooting
- Three-stage drop with innovative "wide fingers"
- Pneumatic system includes optimum filtration system
- Full 17-inch (432mm) stack height capability
- Very fast cycle times, pre-staging of delivery table belt, bundle pusher and auto-sensing for last drop compression
- Press speed following using 0-10 vdc or 0-5vdc signal from press
- Simplified, durable guarding with wide open access to all components All guards safety interlocked and annunciated on main control
- Alternating side pushout with optional second delivery table for very fast cycle times
- Full length removable steps on both sides
- High quality AC drive controls
- Automatic homing features on restarts
- Double crush rollers with independent pressure adjustment ensure tight fold compression for high quality stacks
- Speed following output signal from stacker (0-10 vdc or 0-5vdc) for other equipment to speed follow the machine
- Simplified operator controls utilizes fewer adjustment knobs .

Key Benefits:

- *Highest quality "brick-like" bundles*
- *Exact laser count ensures accuracy*
- *Reduced waste through streamlined set-up and operation*
- *Fast and easy operator make-ready*
- *Highest reliability minimizes downtime*
- *Maximum flexibility for expanded range of product sizes, papers & speeds*
- *Operator-friendly guarding with great accessibility assures safe operation*
- *Easy-to-see, easy-to-understand touch screen controls*
- *Automatic jam detect cleanout function*
- *Fully automatic extending delivery table belt synchronized with stack ejection system ensures high-quality stacks without compromising stack quality or cycle time.*

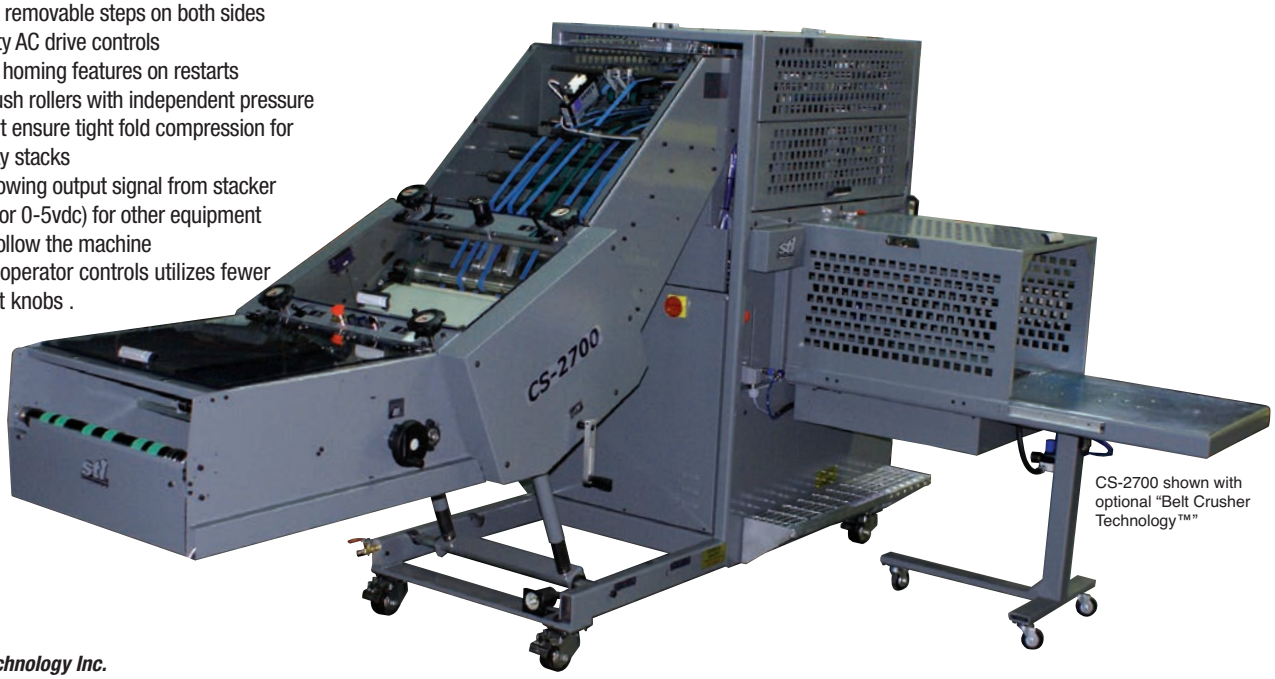

CS-2700 shown with optional "Belt Crusher Technology™"

Systems Technology Inc.
1351 E. Riverview Dr. • San Bernardino • CA 92408 USA • Tel: 909.799.9950 • Fax: 909.796.8297
www.systems-technology-inc.com

CS-2700
Compensating Stacker

TECHNICAL SPECIFICATIONS

Product:	Minimum	Maximum
Product Thickness	.12mm (.005”)	40mm (1.57”)
Product Width	146mm (5.75”)*	500mm (19.69”)
Product Length	100mm (3.94”)	330mm (13.00”)
Product Diagonal		560mm (22.05”)
Stack Height	25mm (1.00”)	432mm (17.00”)
Stream Shingle Lap	19mm (.75”)	102mm (4.00”)
Shingle Offset		±15% from center
Edge Offset		±20mm (±.79”)
Page Count	2-Page (60g/m^2 [35 lbs])	128-Page (60g/m^2 [35 lbs])
Page Weight	35g/m^2 (25 lbs)	140g/m^2 (95 lbs)
Machine:		
Operating Speed	>100,000 Products/hour (Product Build Rate & Cycle Times Permitting)	
Input Power	208-230VAC, 1 or 3Ph @ 20 amps	
Air Requirement	20 scfm @90 psi (570 Norm-l/min)** 1/2” ID air hose required	
Noise Level	82 dB(A)	
Weight	1270kg (2800 lb)	
Paint Color	RAL 7011 (Iron Gray)	

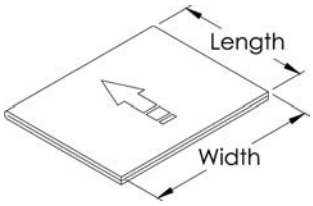

*Optional 5 inch minimum product kit available
**Optional 2.64 gal. reserve air tank available

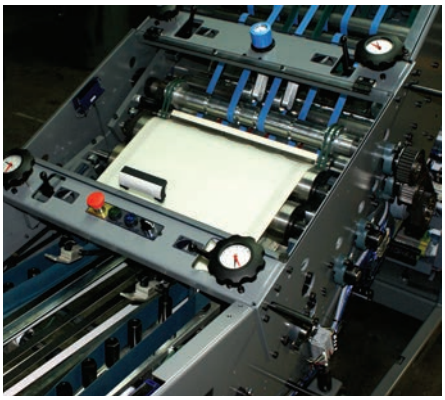

Inlet high frequency jogger and optional Belt Crusher Technology BCT ™

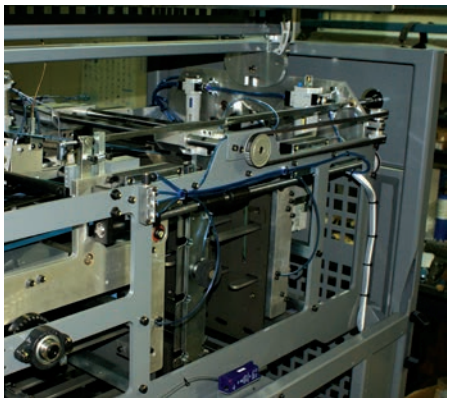

Stack formation with 3-stage drop and 4-side jogging

OPTIONAL:

- Belt Crusher Technology™ – NEW patent-applied for feature helps iron out paper wrinkles even on light-weight stock, while giving unsurpassed spine crushing for flat bundles.
- “High Infeed” version for newspaper/ commercial applications
- Remote encoder for speed following when 0-10vdc press or 0-5vdc signal is not available
- Incoming delivery stream quality detection and auto waste diverting
- “Straight-Line” delivery table for special pressroom space restrictions
- Air pressure sensor
- Auxilary air holding tank
- 5” product kit

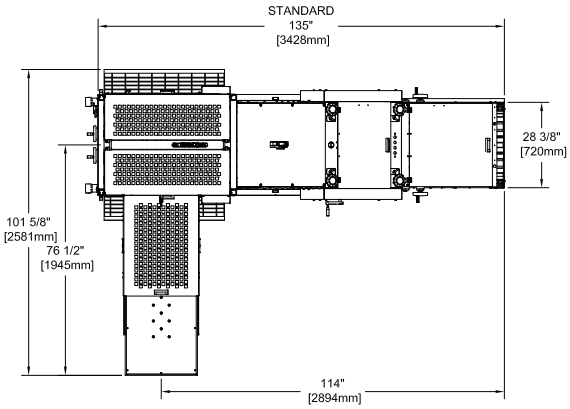

High In Feed Model allows interface for newspaper/commercial operations

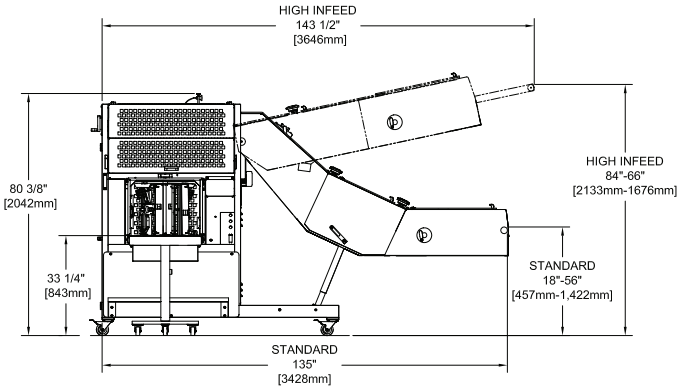

STI reserves the right to change specifications without notice. This equipment covered by U.S. and foreign patents and/ patents applied for.

SYSTEMS TECHNOLOGY, INC.

Systems Technology, Inc.
1351 East Riverview Drive, San Bernardino, CA 92408
TEL: 909-799-9950 • FAX: 909-796-8297
www.systems-technology-inc.com

Rev: STI CS2700 9/08